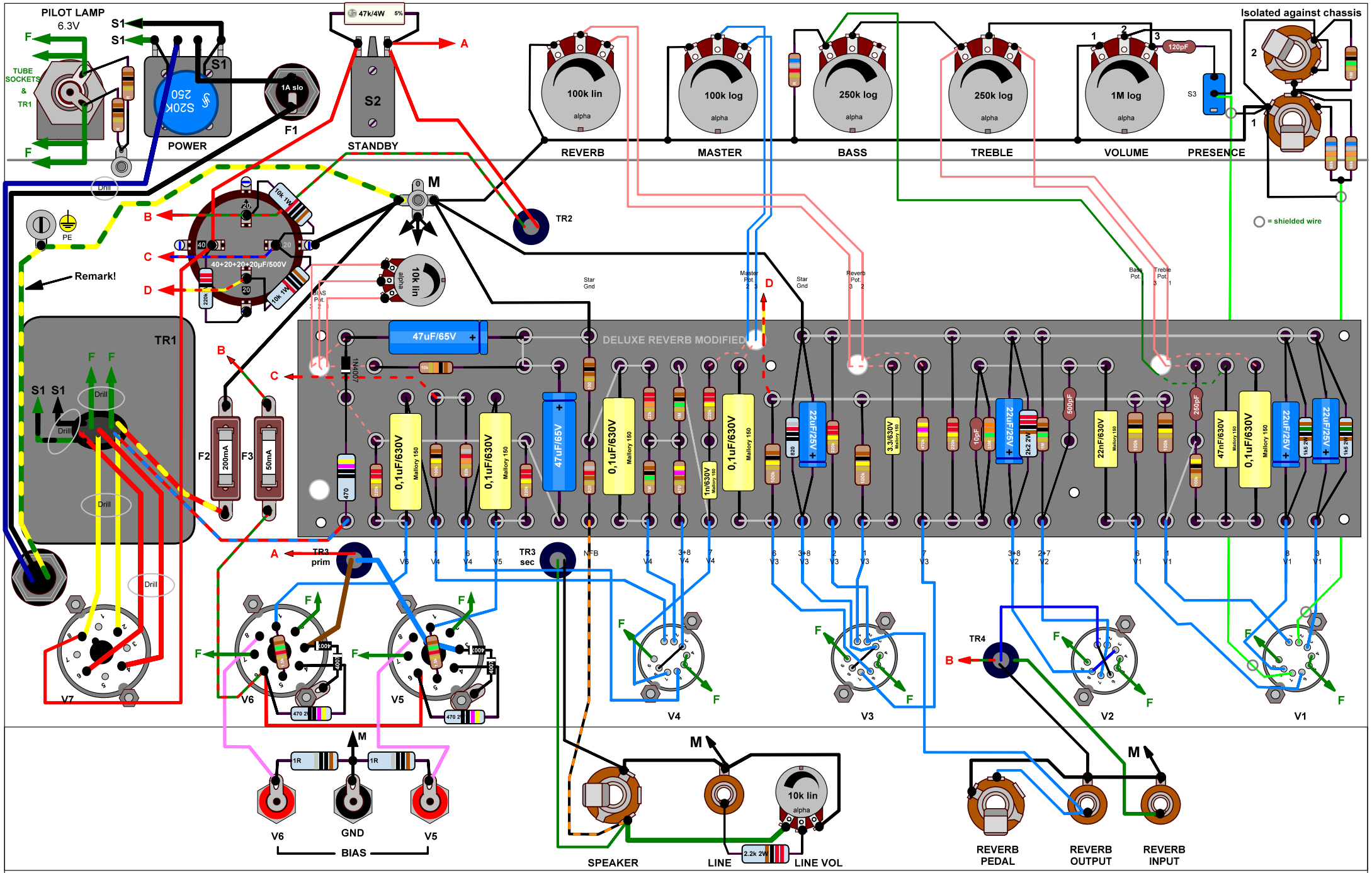

PICTURE SHOWS COMPONENTS FROM THE INSIDE OF CHASSIS.

REMARK!:
FORM A SLOPE SO THAT PE-CONNECTION WILL BECOME THE LAST TO STRIP OFF IN CASE OF PULLING FORCE TO MAINS CABLE:

SOME RECOMMENDATIONS:

KEEP POWER WIRES AWAY FROM SIGNAL LINES. DRILL AC WIRES FIRMLY AND GIVE THEM SEPARATE WAY. PUT FILAMENT'S POWER WIRES WELL DRILLED ALONG THE INNER CHASSIS BEND AWAY FROM THE REST.
SIGNAL WIRES FROM INPUT SOCKETS TO V1 AND FROM V1 TO VOLUME POT SHOULD BE SHIELDED.
ALWAYS KEEP WIRES AS SHORT AS POSSIBLE.

DeLUXE REVERB MOD (AB763)		
Sheet: Amp-Layout		
Code: BB2009	Document: AB763_modified.spl7	Rev.: A1
Date: 30.03.2016	Last edit: 19:11:27	Sheet: 4 of 5